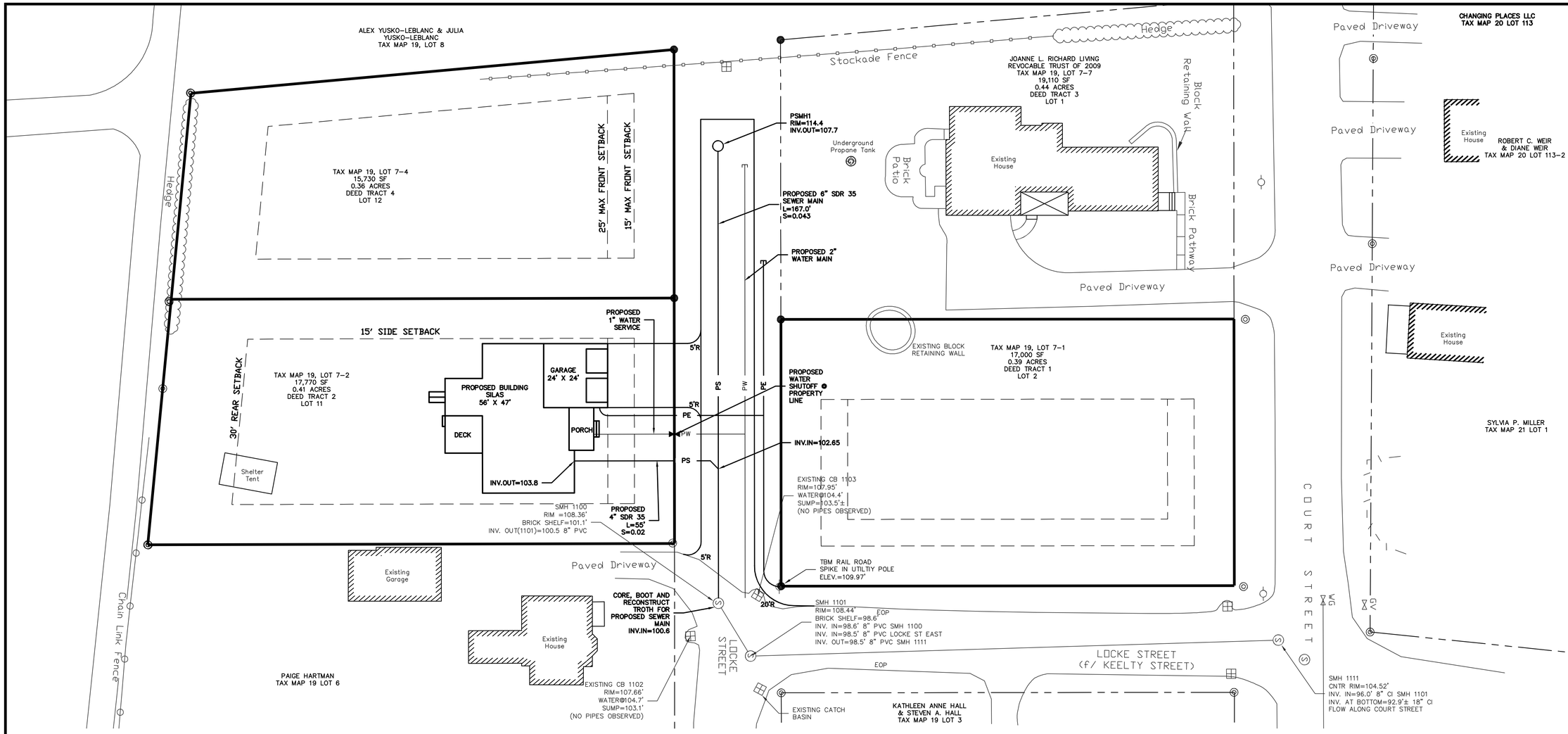

PLAN REFERENCES:

1. "PROPERTY SURVEY" LOCATED AT: 109 COURT STREET, DOVER, STRAFFORD COUNTY, NEW HAMPSHIRE FOR: JOANNE RICHARD LIVING REVOCABLE TRUST C/O DAVID RICHARD, 9 SLEEPY HOLLOW ROAD, WOLFEBORO, NH 03894, PREPARED BY: STONEWALL SURVEYING, SCALE: 1"=30', DATED: AUGUST 1, 2023, REVISED: SEPTEMBER 18, 2023.

NOTES:

1. ALL EXISTING UTILITIES WERE TAKEN FROM PLAN REFERENCE 1 AND SHALL BE ASSUMED APPROXIMATE. CONTRACTOR SHALL VERIFY LOCATIONS IN FIELD.

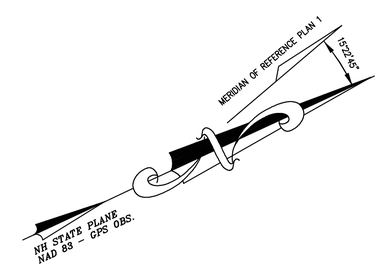

GRAPHIC SCALE

20 0 10 20 40 80

(IN FEET)

NOT FOR CONSTRUCTION FOR PERMIT USE ONLY

GNE CIVILWORKS NEW ENGLAND
CIVIL & WATERWAY ENGINEERING
181 Watson Road, PO Box 1166
Dover, New Hampshire 03821
603.749.0443

NO.	REVISION	APP'D	DATE

DATE: 2-13-24
SCALE: 1"=20'
DRAWN BY: JRG
DESIGN BY: JRG
APPROVED BY:SJH
PROJECT NO: 23151
FILE: SITE

SITE & UTILITY PLAN "LOT 11"

CHINBURG DEVELOPMENT, LLC
3 PENSTOCK WAY
NEWMARKET, NH 03857

SHARED DRIVEWAY
LOCKE STREET
DOVER, NH

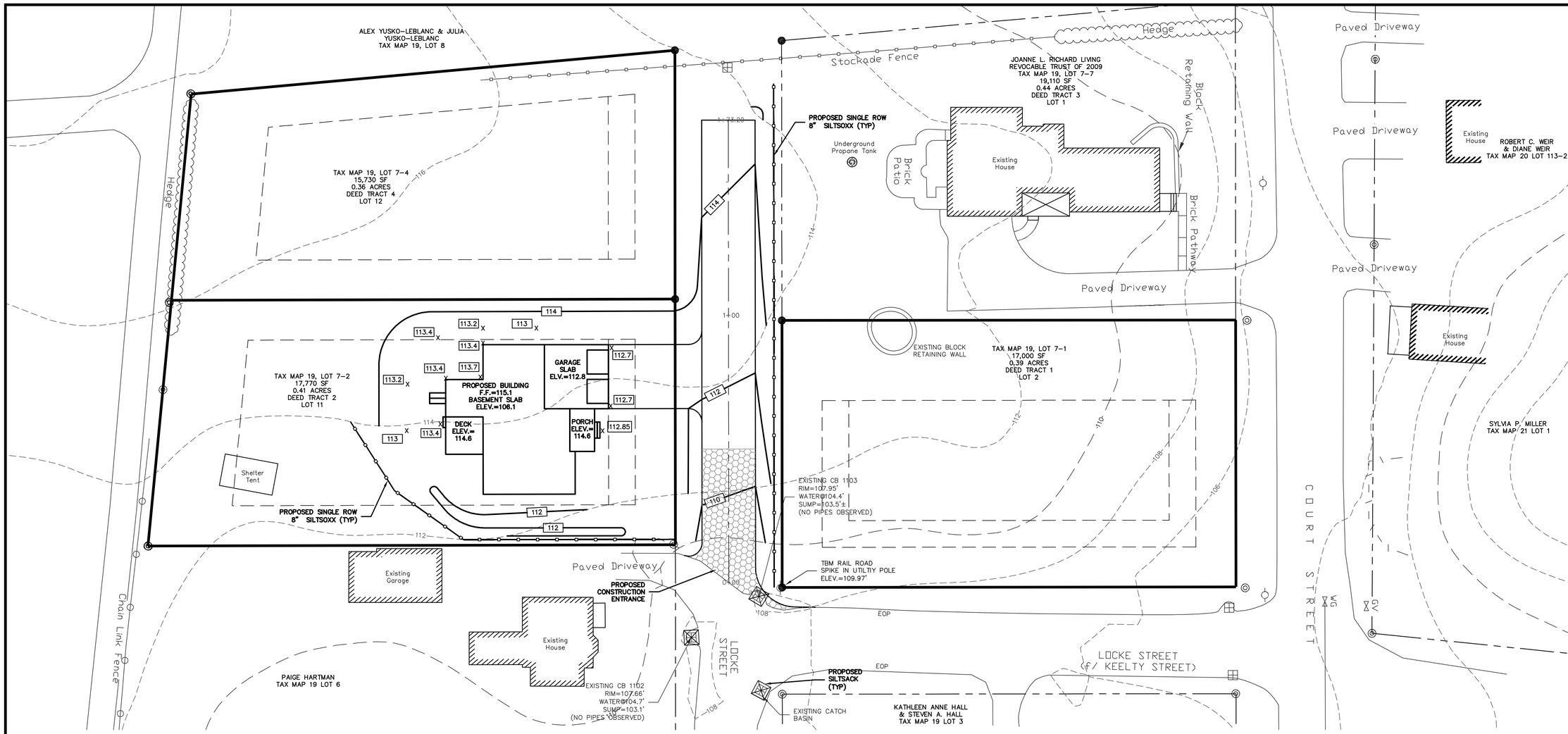

NOTES:

1. PROVIDE INLET PROTECTION BARRIERS AROUND ALL EXISTING AND PROPOSED STORM DRAINAGE INLETS WITHIN THE WORK LIMITS AND AS SHOWN ON PLAN. MAINTAIN FOR THE DURATION OF THE PROJECT UNTIL PAVEMENT HAS BEEN INSTALLED AND UPSTREAM AREAS HAVE BEEN STABILIZED.
2. ALL CUT & FILL SLOPES SHALL HAVE NORTH AMERICAN GREEN SC150BN EROSION CONTROL MATTING INSTALLED ON THEM, SEE DETAIL.

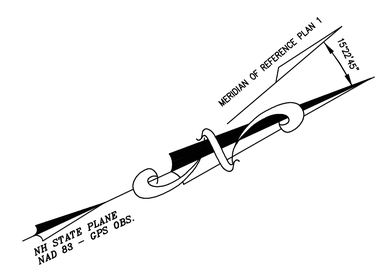

GRAPHIC SCALE

20 0 10 20 40 80

(IN FEET)

NOT FOR CONSTRUCTION FOR PERMIT USE ONLY

CIVILWORKS NEW ENGLAND
CIVIL & WATERWAY ENGINEERING
181 Watson Road, PO Box 1166
Dover, New Hampshire 03821
603.749.0443

NO.	REVISION	APP'D	DATE

DATE: 2-13-24
SCALE: 1"=20'
DRAWN BY: JRG
DESIGN BY: JRG
APPROVED BY:SJH
PROJECT NO: 23151
FILE: SITE

GRADING & EROSION CONTROL PLAN "LOT 11"

CHINBURG DEVELOPMENT, LLC
3 PENSTOCK WAY
NEWMARKET, NH 03857

SHARED DRIVEWAY
LOCKE STREET
DOVER, NH

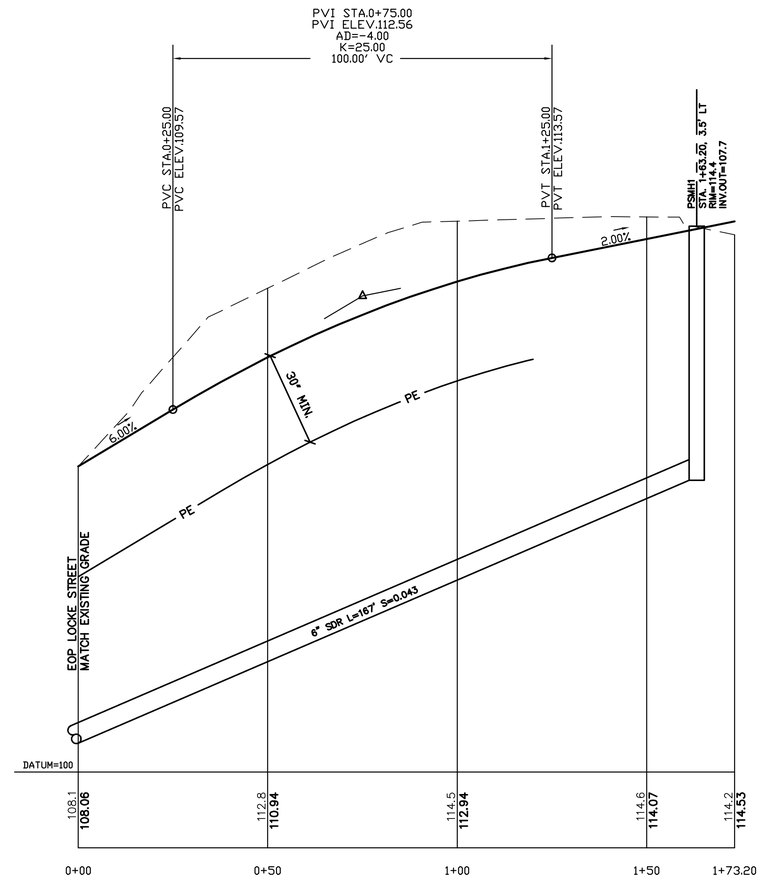

PROFILE
PROPOSED SHARED DRIVEWAY
HORIZONTAL SCALE: 1"=20'
VERTICAL SCALE: 1"=2'

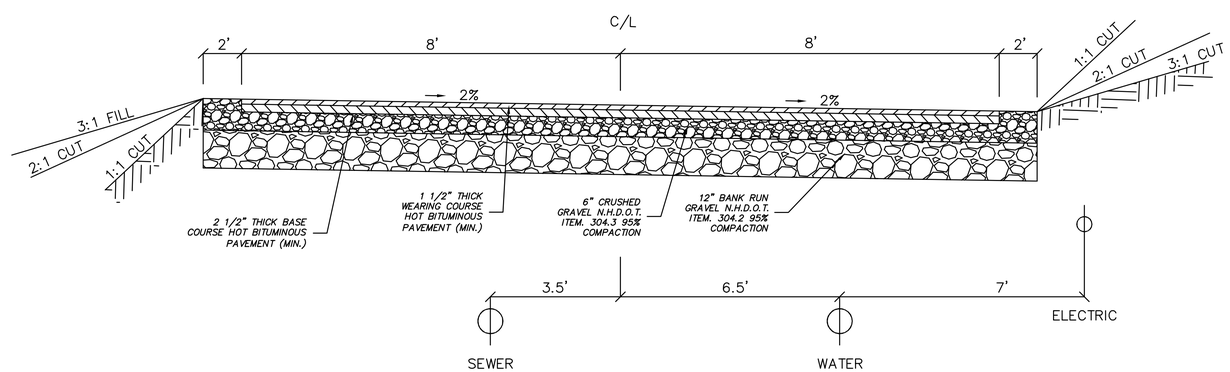

PROPOSED SHARED DRIVE
TYPICAL CROSS SECTION

NOT TO SCALE

NOT FOR CONSTRUCTION FOR PERMIT USE ONLY

GNE
CIVILWORKS NEW ENGLAND
CIVIL & WATERWAY ENGINEERING
181 Watson Road, PO Box 1166
Dover, New Hampshire 03821
603.749.0443

NO.	REVISION	APP'D	DATE

DATE: 2-13-24
SCALE: 1"=20'
DRAWN BY: JRG
DESIGN BY: JRG
APPROVED BY:SJH
PROJECT NO: 23151
FILE: SITE

PROPOSED PROFILE & CROSS-SECTION

CHINBURG
DEVELOPMENT, LLC
3 PENSTOCK WAY
NEWMARKET, NH 03857

SHARED DRIVEWAY
LOCKE STREET
DOVER, NH

SLOPE INSTALLATION

NORTH AMERICAN GREEN – SC150BN

NORTH AMERICAN GREEN
EROSION CONTROL *Products Guaranteed* SOLUTIONS

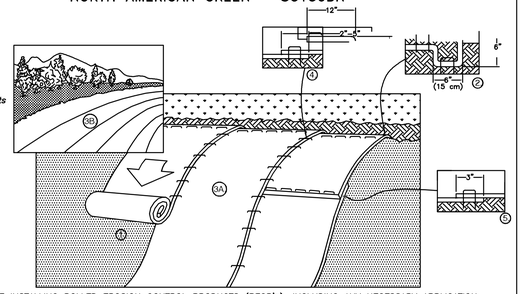

1. PREPARE SOIL BEFORE INSTALLING ROLLED EROSION CONTROL PRODUCTS (RECP's), INCLUDING ANY NECESSARY APPLICATION OF LIME, FERTILIZER, AND SEED.
   NOTE: WHEN USING CELL-O-SEED DO NOT SEED PREPARED AREA. CELL-O-SEED MUST BE INSTALLED WITH PAPER SIDE DOWN.
2. BEGIN AT THE TOP OF THE SLOPE BY ANCHORING THE RECP's IN A 6" (15 CM) DEEP X 6" (15 CM) WIDE TRENCH WITH APPROXIMATELY 12" (30cm) OF RECP's EXTENDED BEYOND THE UP-SLOPE PORTION OF THE TRENCH. ANCHOR THE RECP's WITH A ROW OF STAPLES/STAKES APPROXIMATELY 12" (30 CM) APART IN THE BOTTOM OF THE TRENCH. BACKFILL AND COMPACT THE TRENCH AFTER STAPLING. APPLY SEED TO COMPACTED SOIL AND FOLD REMAINING 12" (30 CM) PORTION OF RECP's BACK OVER SEED AND COMPACTED SOIL. SECURE RECP's OVER COMPACTED SOIL WITH A ROW OF STAPLES/STAKES SPACED APPROXIMATELY 12" (30 CM) APART ACROSS THE WIDTH OF THE RECP's.
3. ROLL THE RECP's (A.) DOWN OR (B.) HORIZONTALLY ACROSS THE SLOPE. RECP's WILL UNROLL WITH APPROPRIATE SIDE AGAINST THE SOIL SURFACE. ALL RECP's MUST BE SECURELY FASTENED TO SOIL SURFACE BY PLACING STAPLES/STAKES IN APPROPRIATE LOCATIONS AS SHOWN IN THE STAPLE PATTERN GUIDE. WHEN USING THE DOT SYSTEM™ , STAPLES/STAKES SHOULD BE PLACED THROUGH EACH OF THE COLORED DOTS CORRESPONDING TO THE APPROPRIATE STAPLE PATTERN.
4. THE EDGES OF PARALLEL RECP's MUST BE STAPLED WITH APPROXIMATELY 2" – 5" (5 CM – 12.5 CM) OVERLAP DEPENDING ON RECP's TYPE.
5. CONSECUTIVE RECP's SPLICED DOWN THE SLOPE MUST BE PLACED END OVER END (SHINGLE STYLE) WITH AN APPROXIMATE 3" (7.5 CM) OVERLAP. STAPLE THROUGH OVERLAPPED AREA, APPROXIMATELY 12" (30 CM) APART ACROSS ENTIRE RECP's WIDTH.
   NOTE:
   *IN LOOSE SOIL CONDITIONS, THE USE OF STAPLE OR STAKE LENGTHS GREATER THAN 6" (15 CM) MAY BE NECESSARY TO PROPERLY SECURE THE RECP's.

NOTE:
1. THE USE OF WELDED PLASTIC OR BIODEGRADABLE PLASTIC NETTING OR THREAD IN EROSION CONTROL MATTING IS PROHIBITED. THE USE OF WILDLIFE FRIENDLY ORGANIC MATERIALS IS RECOMMENDED.
2. ALL EROSION CONTROL MATS SHALL BE INSTALLED ON ALL CUT & FILL SLOPES.

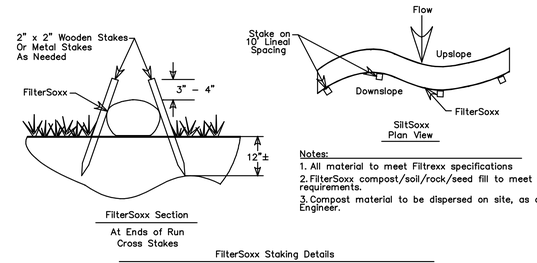

Notes:
1. All material to meet Filtrexx specifications
2. FilterSoxx compost/soil/rock/seed fill to meet application requirements.
3. Compost material to be dispersed on site, as determined by Engineer.

FilterSoxx Staking Details

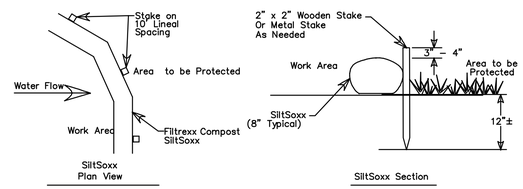

Notes:
1. ALL MATERIAL TO MEET FILTREXX SPECIFICATIONS.
2. SILTSOXX COMPOST/JSOIL/ROCK/SEED FILL TO MEET APPLICATION REQUIREMENTS.
3. SILTSOXX DEPICTED IS FOR MINIMUM SLOPES. GREATER SLOPES MAY REQUIRE LARGER SOCKS PER THE ENGINEER.
4. COMPOST MATERIAL TO BE DISPERSED ON SITE, AS DETERMINED BY ENGINEER.
5. SILT BARRIERS SHALL BE INSTALLED AROUND THE PERIMETER OF EACH BUILDING LOT PRIOR TO COMMENCING EXCAVATION AND MAINTAINED UNTIL THE SITE IS STABILIZED.

SILTSOXX DETAILS

NOT TO SCALE

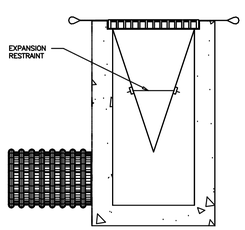

INSTALLATION DETAIL

OIL-ABSORBANT SILTSACK®

(FOR AREAS WHERE THERE IS A CONCERN FOR OIL RUN-OFF OR SPILLS)
DEPENDING ON YOUR PARTICULAR APPLICATION, THE SILTSACK® CAN BE MADE FROM EITHER ONE OF THE ABOVE FABRICS WITH AN OIL-ABSORBANT PILLOW INSERT OR, MADE COMPLETELY FROM AN OIL-ABSORBANT SILTSACK®, WITH A WOVEN PILLOW INSERT.

SILTSACK®
SPECIFICATIONS

NOTE: THE SILTSACK WILL BE MANUFACTURED FROM A WOVEN POLYPROPYLENE FABRIC THAT MEETS OR EXCEEDS THE FOLLOWING SPECIFICATIONS.
AS SUPPLIED BY AH HARRIS OF PORTSMOUTH OR APPROVED EQUAL

REGULAR FLOW SILTSACK®
(FOR AREAS OF LOW TO MODERATE PRECIPITATION AND RUN-OFF)

PROPERTIES	TEST METHOD	UNITS
GRAB TENSILE STRENGTH	ASTM D-4632	300 LBS
GRAB TENSILE ELONGATION	ASTM D-4632	20 %
PUNCTURE	ASTM D-4833	120 LBS
MULLEN BURST	ASTM D-3786	800 PSI
TRAPEZOID TEAR	ASTM D-4533	120 LBS
UV RESISTANCE	ASTM D-4355	80 %
APPARENT OPENING SIZE	ASTM D-4751	40 US SIEVE
FLOW RATE	ASTM D-4491	40 GAL/MIN/SQ FT
PERMITTIVITY	ASTM D-4491	0.55 SEC -1

HI-FLOW SILTSACK®
(FOR AREAS OF MODERATE TO HEAVY PRECIPITATION AND RUN-OFF)

PROPERTIES	TEST METHOD	UNITS
GRAB TENSILE STRENGTH	ASTM D-4632	265 LBS
GRAB TENSILE ELONGATION	ASTM D-4632	20 %
PUNCTURE	ASTM D-4833	135 LBS
MULLEN BURST	ASTM D-3786	420 PSI
TRAPEZOID TEAR	ASTM D-4533	45 LBS
UV RESISTANCE	ASTM D-4355	90 %
APPARENT OPENING SIZE	ASTM D-4751	20 US SIEVE
FLOW RATE	ASTM D-4491	200 GAL/MIN/SQ FT
PERMITTIVITY	ASTM D-4491	1.5 SEC -1

DETAIL OF INLET SEDIMENT CONTROL DEVICE

NOT TO SCALE

DIVERSION RIDGE REQUIRED WHERE GRADE EXCEEDS 2%

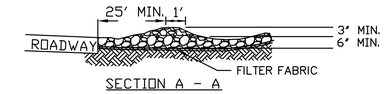

SECTION A – A

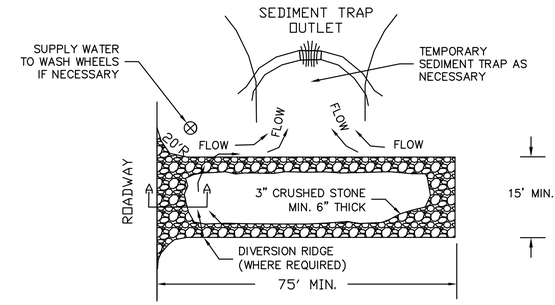

PLAN

A. GENERAL NOTES:

1. A STABILIZED CONSTRUCTION ENTRANCE/EXIT CONSISTS OF A PAD OF STONE AGGREGATE PLACED ON A GEOTEXTILE FILTER FABRIC, LOCATED AT ANY POINT WHERE TRAFFIC WILL BE LEAVING A CONSTRUCTION SITE TO AN EXISTING ACCESS ROAD WAY OR OTHER PAVED SURFACE. ITS PURPOSE IS TO REDUCE OR ELIMINATE THE TRACKING OF SEDIMENT ONTO PUBLIC ROADS BY CONSTRUCTION VEHICLES. THIS HELPS PROTECT RECEIVING WATERS FROM SEDIMENT CARRIED BY STORM WATER RUNOFF FROM ROADS
2. ONLY CONSTRUCTION TRAFFIC LEAVING THE SITE IS REQUIRED TO USE THE TEMPORARY STABILIZED EXIT. CONSIDER PROVIDING A SEPARATE, UNPROTECTED ENTRANCE FOR TRAFFIC ENTERING THE SITE. THIS WILL INCREASE THE LONGEVITY OF THE STABILIZED EXIT BY ELIMINATING HEAVY LOADS ENTERING THE SITE AND REDUCING THE TOTAL TRAFFIC OVER THE DEVICE.
3. LOCATE THE CONSTRUCTION ENTRANCES AND EXITS, A MINIMUM OF 100 FEET FROM INTERSECTIONS, TO LIMIT SEDIMENT LEAVING THE SITE AND TO PROVIDE FOR MAXIMUM UTILITY BY ALL CONSTRUCTION VEHICLES. AVOID ENTRANCES THAT HAVE STEEP GRADES AND ENTRANCES AT CURVES IN ROADS.
4. THE ENTRANCE SHOULD BE MAINTAINED IN A CONDITION THAT WILL PREVENT TRACKING OR FLOWING OF SEDIMENT ONTO PUBLIC RIGHTS-OF-WAY. THIS MAY REQUIRE PERIODIC TOP DRESSING WITH ADDITIONAL STONE AS CONDITIONS DEMAND, AND REPAIR AND/OR MAINTENANCE OF ANY MEASURES USED TO TRAP SEDIMENT.

B. SPECIFICATIONS (TEMPORARY CONSTRUCTION ENTRANCE/EXITS SHOULD MEET THE FOLLOWING REQUIREMENTS).

1. STONE SIZE MINIMUM: USE SHOULD BE 3" CRUSHED STONE.
2. THE MINIMUM LENGTH OF THE PAD SHOULD BE 75 FEET.
3. THE MINIMUM WIDTH OF THE PAD SHOULD BE 15 FEET OR THE WIDTH OF THE ENTRANCE, WHICHEVER IS GREATER
4. THE PAD SHOULD SLOPE AWAY FROM THE EXISTING ROADWAY.
5. THE PAD SHOULD BE AT LEAST 6" THICK.
6. A GEOTEXTILE FILTER FABRIC SHOULD BE PLACED BETWEEN THE STONE PAD AND THE EARTH SURFACE BELOW THE PAD.
7. THE PAD SHOULD BE MAINTAINED OR REPLACED WHEN MUD AND SOIL PARTICLES CLOG THE VOIDS IN THE STONE SUCH THAT MUD AND SOIL PARTICLES ARE TRACKED OFF-SITE.
8. NATURAL DRAINAGE THAT CROSSES THE LOCATION OF THE STONE PAD SHOULD BE INTERCEPTED AND PIPED BENEATH THE PAD, AS NECESSARY, WITH SUITABLE OUTLET PROTECTION.

C. MAINTENANCE REQUIREMENTS (THE ENTRANCE/EXIT SHOULD BE MAINTAINED IN A CONDITION THAT WILL PREVENT TRACKING OF SEDIMENT ONTO PUBLIC RIGHTS-OF-WAY, THIS MAY REQUIRE TOP DRESSING, REPAIR AND/OR CLEAN OUT OF ANY MEASURES USED TO TRAP SEDIMENT).

1. WHEN THE CONTROL PAD BECOMES INEFFECTIVE, THE STONE SHOULD BE REMOVED ALONG WITH THE COLLECTED SOIL MATERIAL, REGRADED ON SITE, AND STABILIZED. THE ENTRANCE SHOULD THEN BE RECONSTRUCTED.
2. THE CONTRACTOR SHOULD SWEEP THE PAVEMENT AT EXITS WHENEVER SOIL MATERIALS ARE TRACKED ONTO THE ADJACENT PAVEMENT OR TRAVELED WAY.
3. WHEN NECESSARY, WHEELS SHALL BE CLEANED PRIOR TO ENTRANCE ONTO PUBLIC RIGHT-OF-WAY. WHEN WHEEL WASHING IS REQUIRED, IT SHOULD BE CONDUCTED ON AN AREA STABILIZED WITH AGGREGATE, WHICH DRAINS INTO AN APPROVED SEDIMENT-TRAPPING DEVICE. ALL SEDIMENT SHOULD BE PREVENTED FROM ENTERING STORM DRAINS, DITCHES OR WATERWAYS.

TEMPORARY CONSTRUCTION ENTRANCE/EXIT

NOT TO SCALE

NOT FOR CONSTRUCTION FOR PERMIT USE ONLY

GNE CIVILWORKS NEW ENGLAND
CIVIL & WATERWAY ENGINEERING
181 Watson Road, PO Box 1166
Dover, New Hampshire 03821
603.749.0443

NO.	REVISION	APP'D	DATE

DATE: 2-13-24
SCALE: 1"=20'
DRAWN BY: JRG
DESIGN BY: JRG
APPROVED BY:SJH
PROJECT NO: 23151
FILE: SITE

EROSION CONTROL DETAILS

CHINBURG DEVELOPMENT, LLC
3 PENSTOCK WAY
NEWMARKET, NH 03857

SHARED DRIVEWAY
LOCKE STREET
DOVER, NH

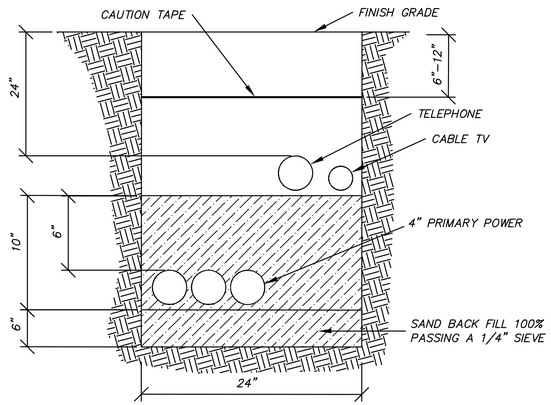

1. TELEPHONE CONDUIT SHALL BE 3" SCHEDULE 40 PVC, WITH STEEL SWEEPS AT RISER POLE, 90° BENDS AND AT BUILDING.
2. LEAVE PULL ROPE IN ALL CONDUITS FOR CABLE INSTALLATION.
3. FOR COMPLETE SPECIFICATIONS SEE "PUBLIC SERVICE COMPANY OF NEW HAMPSHIRE CONSTRUCTION SPECIFICATIONS FOR UNDERGROUND CONDUIT SYSTEMS".
4. CONTRACTOR SHOULD VERIFY THE NUMBER & SIZE OF CONDUIT WITH THE APPROPRIATE UTILITIES.

UTILITY TRENCH

NOT TO SCALE

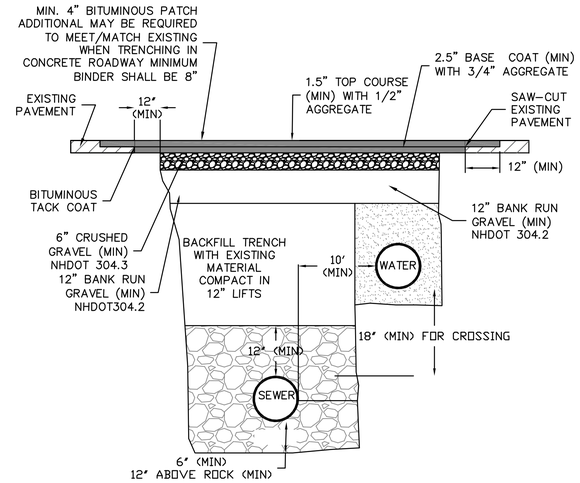

NOTES:
1. TRENCH SHALL BE COMPACTED TO 95% OPTIMUM DENSITY.
2. ALL WORK SHALL COMPLY WITH THE CITY OF DOVER CONSTRUCTION GUIDELINES AND PROCEDURES
3. MAINTAIN 10' (MIN.) HORIZONTAL AND 18" (MIN) VERTICAL SEPARATION BETWEEN WATER & SEWER MAINS (WATER ABOVE SEWER). HORIZONTAL DISTANCE MAY BE REDUCED TO 5' (MIN.) FOR SERVICES PROVIDED THE WATER SERVICE IS A CONTINUOUS PIPE WITHOUT JOINTS OR FITTINGS.

CITY OF DOVER TYPICAL TRENCH DETAIL

NOT TO SCALE

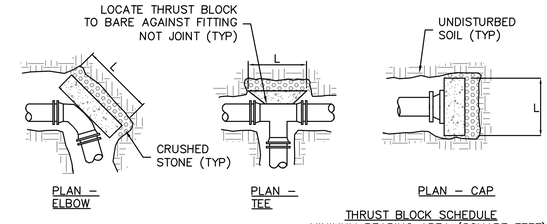

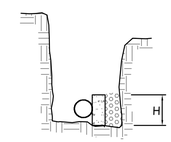

SECTION (TYP)

THRUST BLOCK SCHEDULE
MINIMUM BEARING AREA (SQUARE FEET)

	PIPE SIZE					
Nominal Dia. (in)	4	6	8	10	12	16
Pipe Fittings	*	*	5.18	7.96	11.43	20.29
90 Degree Bends	*	4.11	7.33	11.26	16.17	28.69
45 Degree Bends	*	*	*	6.10	8.75	15.53
22-1/2 Degree Bends	*	*	*	*	4.46	7.92
11-1/4 Degree Bends	*	*	*	*	*	*
*SEE NOTE 2	System Pressure: 125 psi Safety Factor: 1.5 Soil Bearing Capacity: 2,000 psf					

NOTES:
1. ALL THRUST BLOCKS SHALL BE PRE-CAST CONCRETE UNLESS APPROVED BY THE CITY ENGINEER.
2. 2'X2'X2' MINIMUM THRUST BLOCK REQUIRED, ANY BEARING AREA OVER 4SF REQUIRES THRUST BLOCKS, RESTRAINED JOINTS AND CALCULATIONS ASSOCIATED WITH THE JOINT.
3. THE MINIMUM BEARING AREAS SHOWN IN THE THRUST BLOCK SCHEDULE ARE BASED ON A SYSTEM PRESSURE OF 125 PSI. IF THE SYSTEM PRESSURE IS ABOVE 125 PSI, INCREASE THE NOTED AREAS PROPORTIONALLY TO THE ACTUAL SYSTEM PRESSURE.
4. FOR MINIMUM BEARING AREAS OVER 4 SF, THE LENGTH (L) OF THE BLOCK IS APPROXIMATELY TWICE AS LONG AS THE HEIGHT (H).
5. PLACE CRUSHED STONE BEHIND THRUST BLOCK AGAINST UNDISTURBED SOIL.
6. PLACE THRUST BLOCK ALONG MAXIMUM LENGTH OF THE FITTING TO MAXIMIZE BEARING AREA.
7. CONCRETE COMPRESSIVE STRENGTH: 2,000 PSI MINIMUM.
8. USE OF THRUST BLOCKS DOES NOT ELIMINATE THE REQUIREMENT OF OTHER RESTRAINTS OR VICE VERSA.

CITY OF DOVER D-15 THRUST BLOCK DETAIL

NOT TO SCALE

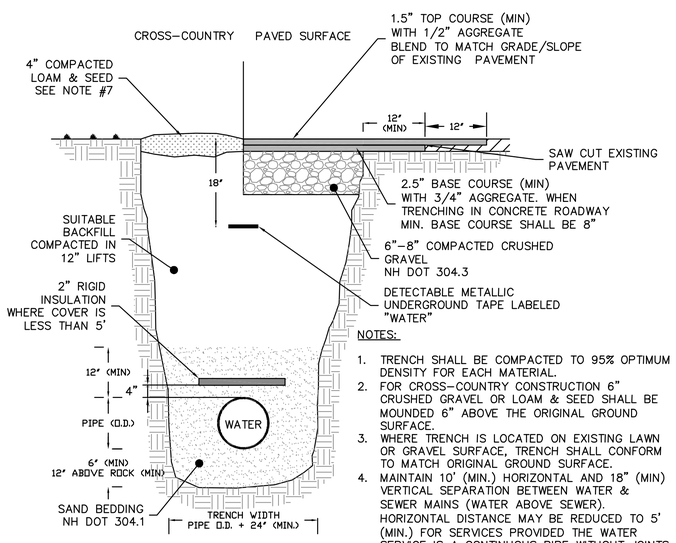

NOTES:
1. TRENCH SHALL BE COMPACTED TO 95% OPTIMUM DENSITY FOR EACH MATERIAL.
2. FOR CROSS-COUNTRY CONSTRUCTION 6" CRUSHED GRAVEL OR LOAM & SEED SHALL BE MOUNDED 6" ABOVE THE ORIGINAL GROUND SURFACE.
3. WHERE TRENCH IS LOCATED ON EXISTING LAWN OR GRAVEL SURFACE, TRENCH SHALL CONFORM TO MATCH ORIGINAL GROUND SURFACE.
4. MAINTAIN 10' (MIN.) HORIZONTAL AND 18" (MIN) VERTICAL SEPARATION BETWEEN WATER & SEWER MAINS (WATER ABOVE SEWER). HORIZONTAL DISTANCE MAY BE REDUCED TO 5' (MIN.) FOR SERVICES PROVIDED THE WATER SERVICE IS A CONTINUOUS PIPE WITHOUT JOINTS OR FITTINGS.
5. BACKFILL MATERIAL SHALL BE THE NATURAL MATERIAL EXCAVATED DURING THE COURSE OF CONSTRUCTION, BUT SHALL EXCLUDE; DEBRIS, PAVEMENT, ORGANIC MATTER, TOP SOIL, MUCK, PEAT, AND ROCKS OVER 6" IN LARGEST DIMENSION
6. PROVIDE MINIMUM 5' OF COVER. ENGINEERING APPROVAL REQUIRED FOR LESS THAN 5' OF COVER.
7. LOAM AND SEED SHOULD BE IN COMPLIANCE WITH NH DOT 641, 642, 643, 644 AND 645.

CITY OF DOVER D-4 WATER TRENCH DETAIL

NOT TO SCALE

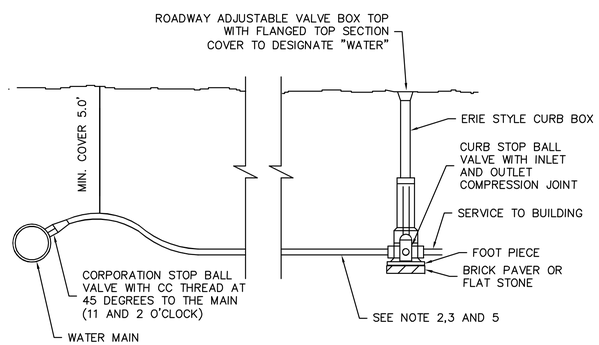

NOTES:
1. ALL WATER LINES 4" OR GREATER SHALL BE DUCTILE IRON WITH AN 8 MIL POLYETHYLENE WRAP, INCLUDING TEE AND OTHER CONNECTIONS.
2. WATER SERVICE LINES SHALL BE COPPER TUBING (TYPE K) BETWEEN MAIN AND CURB STOP.
3. SERVICE BETWEEN CURB STOP AND BUILDING MAY BE (BLUE OR BLACK) CTS SDR 9 PLASTIC POLYETHYLENE RATED FOR 250 psi.
4. CAM-LOCK REQUIRED FOR CTS OR IPS, MJ ADAPTER REQUIRED FOR HDPE
5. ¾"- COPPER, CTS
   1"- COPPER, CTS
   2"- CTS, HDPE, IPS

CITY OF DOVER D-13 WATER SERVICE CONNECTION DETAIL

NOT TO SCALE

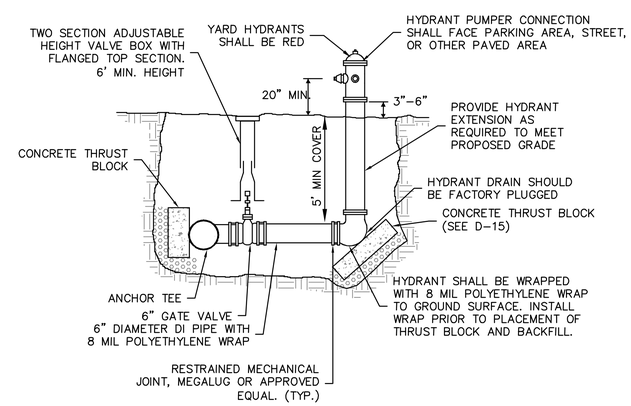

NOTES:
1. FIRE HYDRANTS SHALL BE FACTORY SEALED EDDY STYLE 2641.
2. HYDRANT SHALL BE PAINTED RED WITH EPOXY PAINT AS RECOMMENDED BY THE HYDRANT MANUFACTURER.
3. HYDRANT SHALL OPEN LEFT.

CITY OF DOVER D-14 FIRE HYDRANT DETAIL

NOT TO SCALE

NOT FOR CONSTRUCTION FOR PERMIT USE ONLY

GNE CIVILWORKS NEW ENGLAND
CIVIL & WATERWAY ENGINEERING
181 Watson Road, PO Box 1166
Dover, New Hampshire 03821
603.749.0443

NO.	REVISION	APP'D	DATE

DATE: 2-13-24
SCALE: 1"=20'
DRAWN BY: JRG
DESIGN BY: JRG
APPROVED BY:SJH
PROJECT NO: 23151
FILE: SITE

CHINBURG DEVELOPMENT, LLC
3 PENSTOCK WAY
NEWMARKET, NH 03857

SHARED DRIVEWAY
LOCKE STREET
DOVER, NH

DETAILS